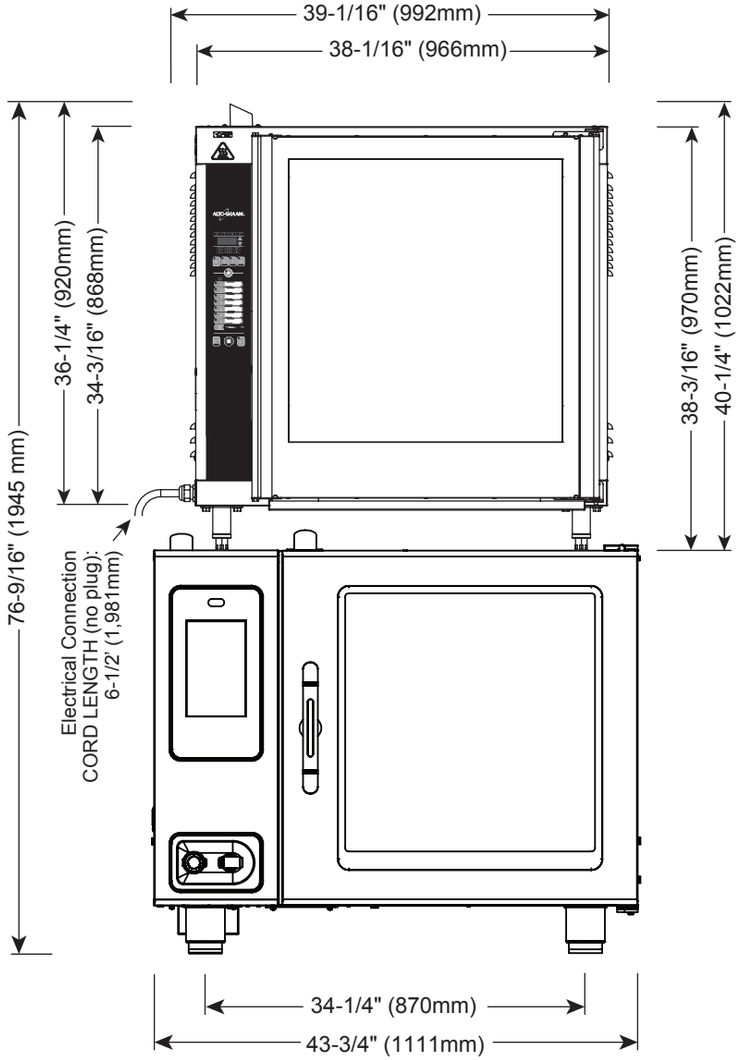

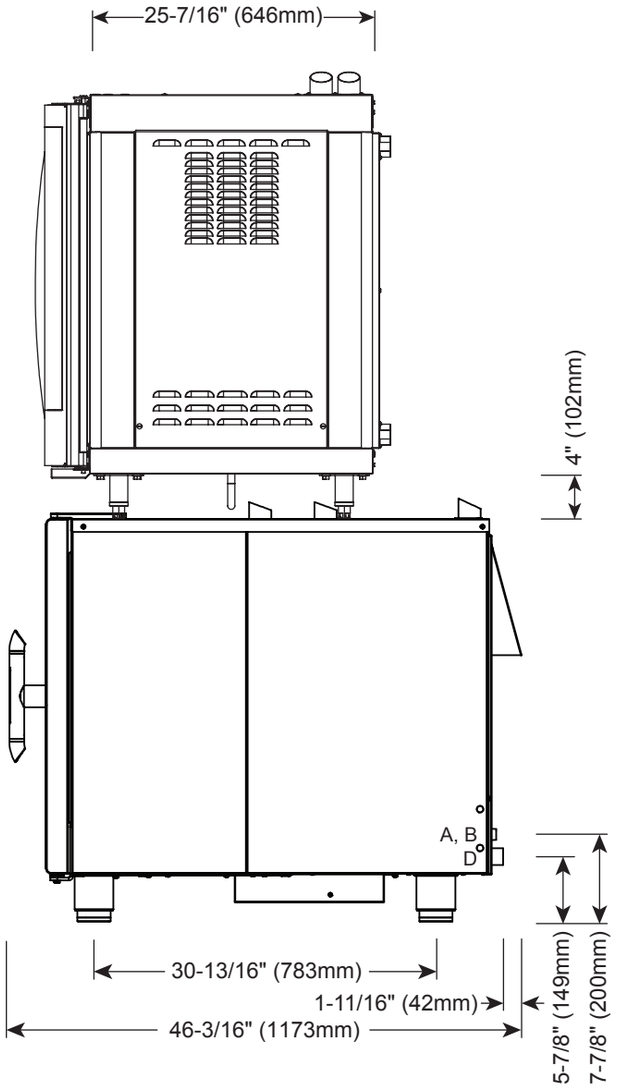
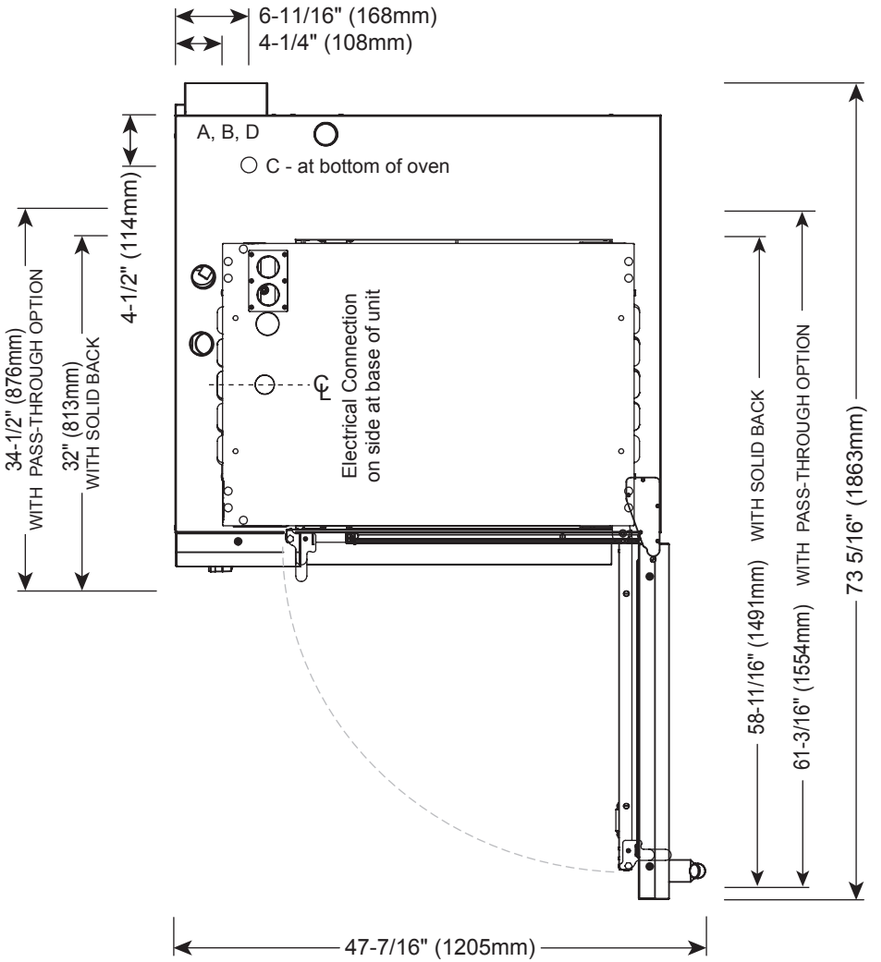
A= UNTREATED WATER
B=TREATED WATER
C= ELECTRICAL
D= WATER DRAIN